ZONING REQUIREMENTS:

TOTAL TRACT AREA = 104.529 ACRES
TAX MAP PARCEL NOS.: BLOCK 48, LOTS 16 & 18 AND BLOCK 64, LOT 6
ZONING DISTRICT : = ARR AGE-RESTRICTED RESIDENTIAL COMMUNITY DISTRICT
PROPOSED USE : SINGLE-FAMILY DWELLINGS WITH AGE-RESTRICTED RESIDENTIAL (ARR) COMMUNITY OVERLAY
TOTAL NUMBER OF PROPOSED LOTS = 227 (229 ALLOWED)

	REQUIRED	PROVIDED
MINIMUM LOT AREA (S.F.)	N/A	>4,900 (MIN.)
MINIMUM LOT WIDTH (FT.) AT BUILDING SETBACK LINE	N/A	>50
MAXIMUM BUILDING HEIGHT (FT.)	35	<35
MINIMUM FRONT YARD (FT.)	20	20
MINIMUM SIDE YARD (FT.)	N/A	5
MINIMUM REAR YARD (FT.)	N/A	15
MINIMUM DISTANCE BETWEEN BUILDINGS (FT.)		
SIDE	10	>10
REAR	30	>30
MAXIMUM GROSS DENSITY (DU/AC)	2.75	< 2.72
MINIMUM OPEN SPACE RATIO	30%	51.0% (53.168 AC.)
MAXIMUM IMPERVIOUS SURFACE RATIO(%)	25%	24.7%
MAXIMUM BUILDING COVERAGE(%)	15%	12.16%
MINIMUM NET SITE AREA (ACRES)	50	102.224 ACRES
MAXIMUM COMMUNITY CENTER HEIGHT	40(*1)	40

(*1) A MAXIMUM OF THREE-(3) STORIES SHALL BE PERMITTED HEIGHT (FT.)

SITE DENSITY CALCULATIONS

SITE DATA:

TOTAL SITE AREA: 104.53 ACRES
EXISTING EGYPT ROAD R.O.W.: 0.75 ACRES
STEEP SLOPE AREAS: 10.6 ACRES
FLOODPLAIN (ALLUVIAL SOILS OUTSIDE STEEP SLOPES): 9.68 ACRES

DEVELOPABLE AREA: 83.5 ACRES

DENSITY:

ALLOWABLE: MAX 2.5 DU/DEVELOPABLE ACRE = 208 LOTS
ALTERNATE ALLOWABLE: MAX 2.75 DU/DEVELOPABLE ACRE = 229 LOTS
PROPOSED: 2.72 DU/DEVELOPABLE ACRE = 227 LOTS
(WITH OPEN SPACE BONUS)

PARKING (COMMUNITY CENTER):

MAXIMUM LAWFUL OCCUPANCY: 100 PERSONS
REQUIRED PARKING: 0.75 STALLS PER 1 PERSON LEGAL OCCUPANCY(75 PROPOSED)
PROPOSED: 84 STALLS
56 PAVED STALLS (INCLUDING 2 HANDICAP STALLS)
28 STALLS IN UNPAVED RESERVE PARKING AREA

OWNER OF RECORD:

TOLL PA II, L.P.
250 GIBRALTAR ROAD
HORSHAM, PA. 19044
(215) 914-2050

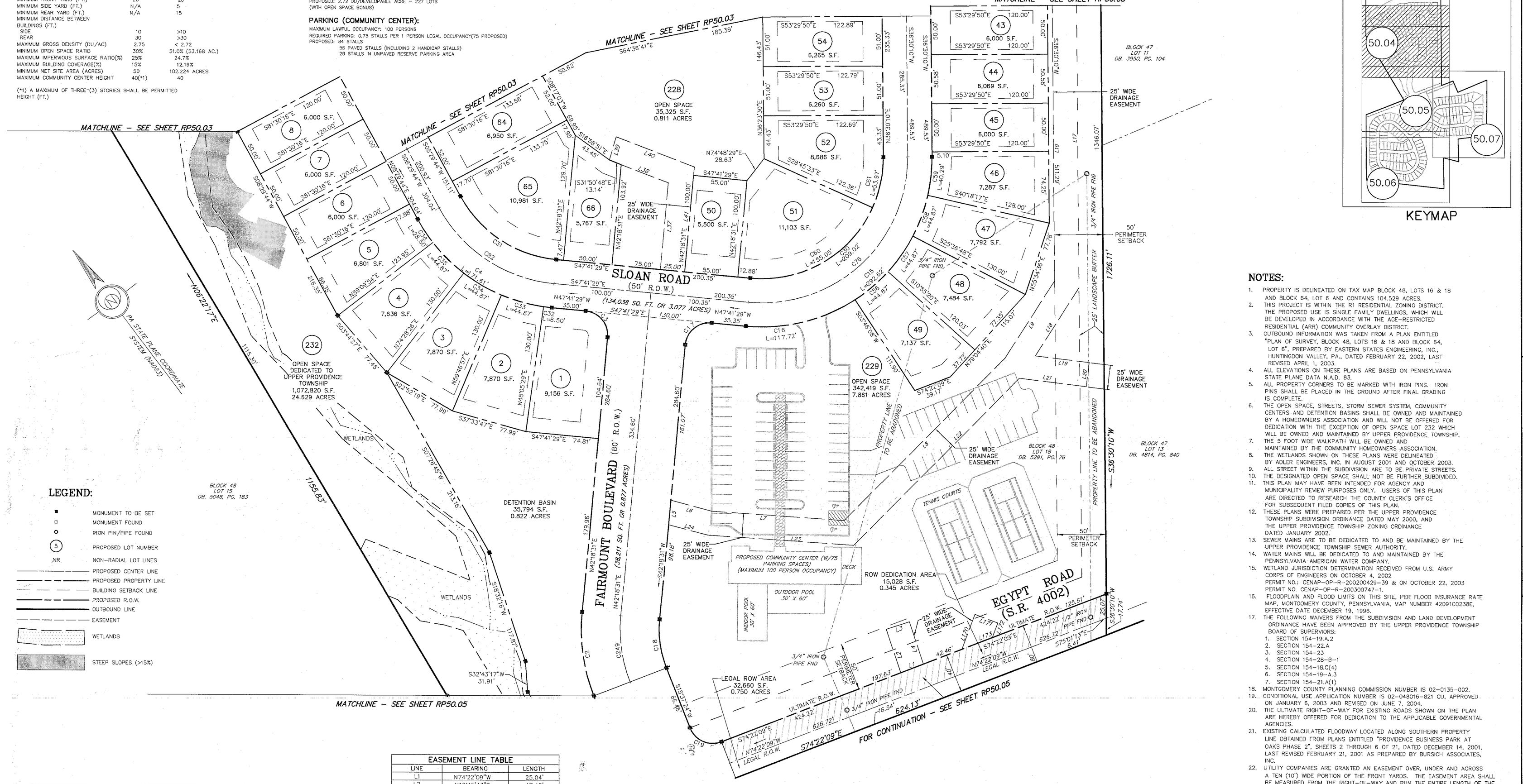

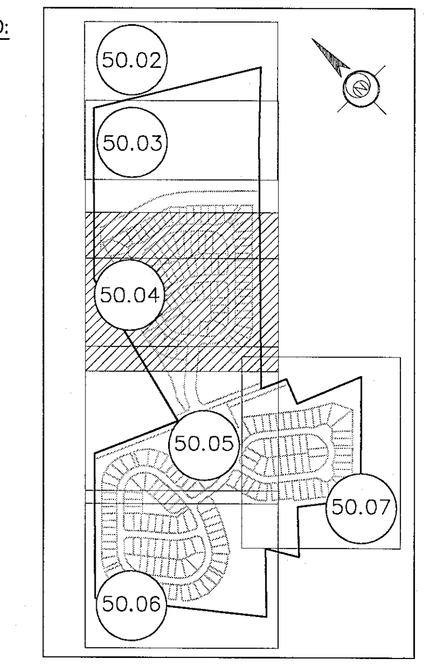

KEYMAP

NOTES:

1. PROPERTY IS DELINEATED ON TAX MAP BLOCK 48, LOTS 16 & 18 AND BLOCK 64, LOT 6 AND CONTAINS 104.529 ACRES.
2. THIS PROJECT IS WITHIN THE R1 RESIDENTIAL ZONING DISTRICT. THE PROPOSED USE IS SINGLE FAMILY DWELLINGS, WHICH WILL BE DEVELOPED IN ACCORDANCE WITH THE AGE-RESTRICTED RESIDENTIAL (ARR) COMMUNITY OVERLAY DISTRICT.
3. OUTBOUND INFORMATION WAS TAKEN FROM A PLAN ENTITLED "PLAN OF SURVEY, BLOCK 48, LOTS 16 & 18 AND BLOCK 64, LOT 6", PREPARED BY EASTERN STATES ENGINEERING, INC., HUNTINGDON VALLEY, PA., DATED FEBRUARY 22, 2002, LAST REVISED APRIL 1, 2003.
4. ALL ELEVATIONS ON THESE PLANS ARE BASED ON PENNSYLVANIA STATE PLANE DATA N.A.D. 83.
5. ALL PROPERTY CORNERS TO BE MARKED WITH IRON PINS. IRON PINS SHALL BE PLACED IN THE GROUND AFTER FINAL GRADING IS COMPLETE.
6. THE OPEN SPACE, STREETS, STORM SEWER SYSTEM, COMMUNITY CENTERS AND DETENTION BASINS SHALL BE OWNED AND MAINTAINED BY A HOMEOWNERS ASSOCIATION AND WILL NOT BE OFFERED FOR DEDICATION WITH THE EXCEPTION OF OPEN SPACE LOT 232 WHICH WILL BE OWNED AND MAINTAINED BY UPPER PROVIDENCE TOWNSHIP.
7. THE 5 FOOT WIDE WALKPATH WILL BE OWNED AND MAINTAINED BY THE COMMUNITY HOMEOWNERS ASSOCIATION.
8. THE WETLANDS SHOWN ON THESE PLANS WERE DELINEATED BY ADLER ENGINEERS, INC. IN AUGUST 2001 AND OCTOBER 2003.
9. ALL STREET WITHIN THE SUBDIVISION ARE TO BE PRIVATE STREETS.
10. THE DESIGNATED OPEN SPACE SHALL NOT BE FURTHER SUBDIVIDED.
11. THIS PLAN MAY HAVE BEEN INTENDED FOR AGENCY AND MUNICIPALITY REVIEW PURPOSES ONLY. USERS OF THIS PLAN ARE DIRECTED TO RESEARCH THE COUNTY CLERK'S OFFICE FOR SUBSEQUENT FILED COPIES OF THIS PLAN.
12. THESE PLANS WERE PREPARED PER THE UPPER PROVIDENCE TOWNSHIP SUBDIVISION ORDINANCE DATED MAY 2000, AND THE UPPER PROVIDENCE TOWNSHIP ZONING ORDINANCE DATED JANUARY 2002.
13. SEWER MAINS ARE TO BE DEDICATED TO AND BE MAINTAINED BY THE UPPER PROVIDENCE TOWNSHIP SEWER AUTHORITY.
14. WATER MAINS WILL BE DEDICATED TO AND MAINTAINED BY THE PENNSYLVANIA AMERICAN WATER COMPANY.
15. WETLAND JURISDICTION DETERMINATION RECEIVED FROM U.S. ARMY CORPS OF ENGINEERS ON OCTOBER 4, 2002
PERMIT NO.: CENAP-OP-R-200200429-39 & ON OCTOBER 22, 2003
PERMIT NO. CENAP-OP-R-200300747-1.
16. FLOODPLAIN AND FLOOD LIMITS ON THIS SITE, PER FLOOD INSURANCE RATE MAP, MONTGOMERY COUNTY, PENNSYLVANIA, MAP NUMBER 42091C0238E, EFFECTIVE DATE DECEMBER 19, 1996.
17. THE FOLLOWING WAIVERS FROM THE SUBDIVISION AND LAND DEVELOPMENT ORDINANCE HAVE BEEN APPROVED BY THE UPPER PROVIDENCE TOWNSHIP BOARD OF SUPERVISORS:
    1. SECTION 154-19.A.2
    2. SECTION 154-22.A
    3. SECTION 154-23
    4. SECTION 154-28-B-1
    5. SECTION 154-18.C(4)
    6. SECTION 154-19-A.3
    7. SECTION 154-21.A(1)
18. MONTGOMERY COUNTY PLANNING COMMISSION NUMBER IS 02-0135-002.
19. CONDITIONAL USE APPLICATION NUMBER IS 02-048016-821 CU, APPROVED ON JANUARY 6, 2003 AND REVISED ON JUNE 7, 2004.
20. THE ULTIMATE RIGHT-OF-WAY FOR EXISTING ROADS SHOWN ON THE PLAN ARE HEREBY OFFERED FOR DEDICATION TO THE APPLICABLE GOVERNMENTAL AGENCIES.
21. EXISTING CALCULATED FLOODWAY LOCATED ALONG SOUTHERN PROPERTY LINE OBTAINED FROM PLANS ENTITLED "PROVIDENCE BUSINESS PARK AT OAKS PHASE 2", SHEETS 2 THROUGH 6 OF 21, DATED DECEMBER 14, 2001, LAST REVISED FEBRUARY 21, 2001 AS PREPARED BY BURSICH ASSOCIATES, INC.
22. UTILITY COMPANIES ARE GRANTED AN EASEMENT OVER, UNDER AND ACROSS A TEN (10') WIDE PORTION OF THE FRONT YARDS. THE EASEMENT AREA SHALL BE MEASURED FROM THE RIGHT-OF-WAY AND RUN THE ENTIRE LENGTH OF THE LOT. THE EASEMENT IS GRANTED FOR THE PURPOSE OF PLACEMENT AND MAINTENANCE OF ELECTRIC TRANSFORMERS AND TELEPHONE AND CABLE TERMINAL BOXES, WHICH WILL BE ENGINEERED FOR SPECIFIC LOCATIONS ON LOTS PER THE UTILITY COMPANIES DESIGN CRITERIA AND WILL NOT BE RELOCATED.
23. THE PROPOSED +/-10,000 S.F. COMMUNITY CENTER WHICH INCLUDES A FITNESS CENTER, MEETING ROOM, BILLIARDS ROOM, INDOOR AND OUTDOOR POOL, IS FOR THE EXCLUSIVE USE OF RESIDENTS OF THIS COMMUNITY AND THEIR GUESTS ONLY.
24. THE MINIMUM LOT AREA IS 4,901 S.F., THE MAXIMUM AREA IS 14,437 S.F. AND THE AVERAGE LOT AREA IS 7,142 S.F.
25. FOR OWNERSHIP AND MAINTENANCE PURPOSES A 20' WIDE SANITARY SEWER EASEMENT IS DEDICATED TO THE UPPER PROVIDENCE TOWNSHIP SEWER AUTHORITY FOR ALL SANITARY SEWER LOCATED WITHIN THE OUTBOUND OF THE PROJECT.

LEGEND:

- MONUMENT TO BE SET
- MONUMENT FOUND
- IRON PIN/PIPE FOUND
- (5) PROPOSED LOT NUMBER
- NR NON-RADIAL LOT LINES
- PROPOSED CENTER LINE
- PROPOSED PROPERTY LINE
- BUILDING SETBACK LINE
- PROPOSED R.O.W.
- OUTBOUND LINE
- EASEMENT
- WETLANDS
- STEEP SLOPES (>15%)

CURVE TABLE

CURVE	RADIUS	LENGTH	TANGENT	CHORD	CHORD BEARING	DELTA
C1	25.00'	39.27'	25.00'	35.36'	N60°33'38"E	90°00'27"
C2	190.00'	88.49'	45.06'	87.69'	S28°57'58"W	26°41'07"
C3	25.00'	39.27'	25.00'	35.36'	N02°41'29"W	90°00'00"
C4	175.00'	171.61'	93.42'	164.82'	S19°35'52"E	56°11'13"
C15	175.00'	292.62'	193.70'	259.70'	N84°24'21"E	95°48'21"
C16	175.00'	117.72'	61.18'	115.51'	S66°57'40"E	38°32'23"
C17	25.00'	39.27'	25.00'	35.36'	S87°18'31"W	90°00'00"
C18	110.00'	51.23'	26.09'	50.77'	S28°57'58"W	26°41'07"
C19	25.00'	39.27'	25.00'	35.35'	S29°22'22"E	89°59'33"
C30	125.00'	209.02'	138.35'	185.50'	N84°24'21"E	95°48'21"
C31	125.00'	122.58'	66.73'	117.73'	S19°35'52"E	56°11'13"
C32	175.00'	8.50'	4.25'	8.50'	S46°18'00"E	2°46'58"
C33	175.00'	44.87'	22.56'	44.75'	S37°33'47"E	14°41'28"
C34	175.00'	44.87'	22.56'	44.75'	S22°52'19"E	14°41'28"
C35	175.00'	44.87'	22.56'	44.75'	S08°10'50"E	14°41'28"
C36	175.00'	28.50'	14.28'	28.47'	S03°49'49"W	9°19'50"
C56	175.00'	44.87'	22.56'	44.75'	N86°25'24"E	14°41'28"
C57	175.00'	44.87'	22.56'	44.75'	N71°43'56"E	14°41'28"
C58	175.00'	44.87'	22.56'	44.75'	N57°02'27"E	14°41'28"
C59	175.00'	40.28'	20.24'	40.21'	N43°05'57"E	13°11'33"
C60	125.00'	155.65'	89.27'	145.30'	S83°13'31"E	71°04'04"
C61	125.00'	53.97'	27.41'	53.55'	N48°52'18"E	24°44'17"
C76	150.00'	250.82'	186.03'	222.60'	N84°24'21"E	95°48'21"
C82	150.00'	147.10'	80.07'	141.27'	S19°35'52"E	56°11'13"
C249	150.00'	69.86'	35.58'	69.23'	S28°57'58"W	26°41'07"

EASEMENT LINE TABLE

LINE	BEARING	LENGTH
L1	N74°22'09"W	25.04'
L2	N18°45'43"E	47.48'
L3	S71°14'17"E	25.00'
L4	S18°45'43"W	46.11'
L5	N42°18'31"E	25.35'
L6	S38°07'33"E	43.90'
L7	S49°11'14"E	135.81'
L8	N81°35'55"E	235.74'
L9	N69°31'12"E	95.03'
L10	N36°30'10"E	923.08'
L17	S36°30'10"W	955.53'
L18	N69°31'12"E	83.50'
L19	S45°59'45"E	55.79'
L20	S44°00'15"W	25.00'
L21	N45°59'45"W	69.34'
L22	S81°35'55"W	242.87'
L23	N49°11'14"W	149.68'
L24	N38°07'33"W	42.41'
L37	N42°18'31"E	89.73'
L38	N31°50'48"W	65.12'
L39	N53°14'40"E	25.09'
L40	S31°50'48"E	86.16'
L41	S42°18'31"W	108.62'
L170	N57°20'14"E	38.49'
L171	S32°39'46"E	25.00'
L172	S57°20'14"W	16.21'
L173	N74°22'09"W	33.49'

AREA TABULATION – REGENCY AT PROVIDENCE:

TOTAL SITE AREA:	4,553,323 SQ. FT. OR	104.529 ACRES
PROPOSED 227 LOTS:	1,621,402 SQ. FT. OR	37.221 ACRES
FAIRMOUNT BOULEVARD ROW AREA:	38,211 SQ. FT. OR	0.877 ACRES
SLOAN ROAD ROW AREA:	134,038 SQ. FT. OR	3.077 ACRES
THAYER WAY ROW AREA:	28,574 SQ. FT. OR	0.656 ACRES
EDEN BOULEVARD ROW AREA:	31,492 SQ. FT. OR	0.723 ACRES
COPLEY ROAD ROW AREA:	22,932 SQ. FT. OR	0.526 ACRES
PETER'S WAY ROW AREA:	115,480 SQ. FT. OR	2.651 ACRES
LOGAN ROAD ROW AREA:	27,311 SQ. FT. OR	0.627 ACRES
HANOVER ROAD ROW AREA:	93,460 SQ. FT. OR	2.146 ACRES
EGYPT ROAD LEGAL ROW AREA:	32,660 SQ. FT. OR	0.750 ACRES
EGYPT ROAD DEDICATED ROW AREA:	46,971 SQ. FT. OR	1.078 ACRES
ANDERSON ROAD ROW AREA:	9,016 SQ. FT. OR	0.207 ACRES
DETENTION BASIN LOT AREA:	35,794 SQ. FT. OR	0.822 ACRES
OPEN SPACE LOT 228 AREA:	35,325 SQ. FT. OR	0.811 ACRES
OPEN SPACE LOT 229 AREA:	342,419 SQ. FT. OR	7.861 ACRES
OPEN SPACE LOT 230 AREA:	840,702 SQ. FT. OR	19.300 ACRES
OPEN SPACE LOT 231 AREA:	24,716 SQ. FT. OR	0.567 ACRES
OPEN SPACE LOT 232 AREA:	1,072,820 SQ. FT. OR	24.629 ACRES
TOTAL OPEN SPACE AREA:	2,315,982 SQ. FT. OR	53.168 ACRES

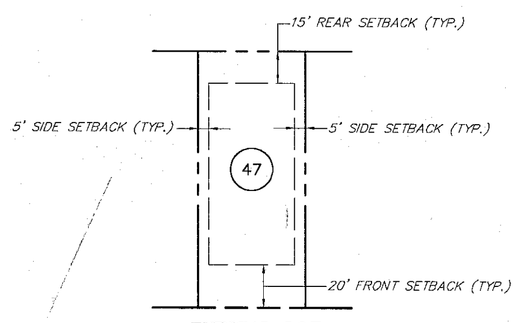

TYPICAL LOT REQUIRED SETBACKS
SCALE: 1=50'

GRAPHIC SCALE
50 0 25 50 100 200
(IN FEET)
1 inch = 50 ft.

CAUTION: THIS DOCUMENT DOES NOT CONTAIN A RAISED SEAL OF THE PROFESSIONAL AND MAY NOT BE A TRUE AND AUTHORIZED ORIGINAL DOCUMENT AND MAY HAVE BEEN ALTERED.

THOMAS B. HENDRICKS
PROFESSIONAL LAND SURVEYOR
PA. LICENSE NO. SU-044592-E

ESE EASTERN STATES ENGINEERING
250 GIBRALTAR ROAD
SUITE 25
HORSHAM, PA. 19044
TEL: (215) 914-2050
FAX: (215) 293-5488
CIVIL ENGINEERS - LAND SURVEYORS - LANDSCAPE ARCHITECTS - LAND PLANNERS

REV	DATE	DESCRIPTION	DRAWN
8	01/28/05	REVIEW LETTER DATED 01/28/05 & UPDATED TITLE BLOCK	KMS
7	01/12/05	REVIEW LETTER DATED 01/06/05	KMS
6	11/22/04	REVIEW LETTER 9/28/04; REDS. A, B, D & COMM CTR	KMS
5	10/18/04	AGENCY REVIEW LETTER, DATED 10/08/04	KMS
4	10/20/04	AGENCY REVIEW LETTER, DATED 9/28/04	KMS
3	8/24/04	AGENCY REVIEW LETTERS 8/20/04 & 8/23/04	KMS
2	7/21/04	AGENCY REVIEW LETTERS 6/29/04 & 6/30/04	KMS
1	6/07/04	AGENCY REVIEW LETTERS, TOWNSHIP COMMENTS	KMS

FINAL MAJOR SUBDIVISION PLAN (SHEET 4 OF 7)

REGENCY AT PROVIDENCE (A.K.A. FOGEL)
UPPER PROVIDENCE TWP., MONTGOMERY COUNTY, PENNSYLVANIA

DATE: 12/08/03	SCALE: 1"=50'
DESIGN: JT	DRAWN: KMS
JOB NO.: 1114	FILE NAME: RP50.04
REF. NO.: RP50.04	
SHEET NO.: 5 OF 78	