NOTES:

1. PROPERTY IS DELINEATED ON TAX MAP BLOCK 48, LOTS 16 & 18 AND BLOCK 64, LOT 6 AND CONTAINS 104.529 ACRES.
2. THIS PROJECT IS WITHIN THE R1 RESIDENTIAL ZONING DISTRICT. THE PROPOSED USE IS SINGLE FAMILY DWELLINGS, WHICH WILL BE DEVELOPED IN ACCORDANCE WITH THE AGE-RESTRICTED RESIDENTIAL (ARR) COMMUNITY OVERLAY DISTRICT.
3. OUTBOUND INFORMATION WAS TAKEN FROM A PLAN ENTITLED "PLAN OF SURVEY, BLOCK 48, LOTS 16 & 18 AND BLOCK 64, LOT 6", PREPARED BY EASTERN STATES ENGINEERING, INC., HUNTINGDON VALLEY, PA., DATED FEBRUARY 22, 2002, LAST REVISED APRIL 1, 2003.
4. ALL ELEVATIONS ON THESE PLANS ARE BASED ON PENNSYLVANIA STATE PLANE DATA N.A.D. 83.
5. ALL PROPERTY CORNERS TO BE MARKED WITH IRON PINS. IRON PINS SHALL BE PLACED IN THE GROUND AFTER FINAL GRADING IS COMPLETE.
6. THE OPEN SPACE, STREETS, STORM SEWER SYSTEM, COMMUNITY CENTERS AND DETENTION BASINS SHALL BE OWNED AND MAINTAINED BY A HOMEOWNERS ASSOCIATION AND WILL NOT BE OFFERED FOR DEDICATION WITH THE EXCEPTION OF OPEN SPACE LOT 232 WHICH WILL BE OWNED AND MAINTAINED BY UPPER PROVIDENCE TOWNSHIP.
7. THE 3 FOOT WIDE WALKPATH WILL BE OWNED AND MAINTAINED BY THE COMMUNITY HOMEOWNERS ASSOCIATION.
8. THE WETLANDS SHOWN ON THESE PLANS WERE DELINEATED BY ADLER ENGINEERS, INC. IN AUGUST 2001 AND OCTOBER 2003.
9. ALL STREET WITHIN THE SUBDIVISION ARE TO BE PRIVATE STREETS.
10. THE DESIGNATED OPEN SPACE SHALL NOT BE FURTHER SUBDIVIDED.
11. THIS PLAN MAY HAVE BEEN INTENDED FOR AGENCY AND MUNICIPALITY REVIEW PURPOSES ONLY. USERS OF THIS PLAN ARE DIRECTED TO RESEARCH THE COUNTY CLERK'S OFFICE FOR SUBSEQUENT FILED COPIES OF THIS PLAN.
12. THESE PLANS WERE PREPARED PER THE UPPER PROVIDENCE TOWNSHIP SUBDIVISION ORDINANCE, DATED MAY 2000, AND THE UPPER PROVIDENCE TOWNSHIP ZONING ORDINANCE, DATED JANUARY 2002.
13. SEWER MAINS ARE TO BE DEDICATED TO AND BE MAINTAINED BY THE UPPER PROVIDENCE TOWNSHIP SEWER AUTHORITY.
14. WATER MAINS WILL BE DEDICATED TO AND MAINTAINED BY THE PENNSYLVANIA AMERICAN WATER COMPANY.
15. WETLAND JURISDICTION DETERMINATION RECEIVED FROM U.S. ARMY CORPS OF ENGINEERS ON OCTOBER 4, 2002. PERMIT NO.: CENAP-OP-R-200200429-39 & ON OCTOBER 22, 2003 PERMIT NO. CENAP-OP-R-200300747-1.
16. FLOODPLAIN AND FLOOD LIMITS ON THIS SITE, PER FLOOD INSURANCE RATE MAP, MONTGOMERY COUNTY, PENNSYLVANIA, MAP NUMBER 42091C0238E, EFFECTIVE DATE DECEMBER 19, 1996.
17. THE FOLLOWING WAIVERS FROM THE SUBDIVISION AND LAND DEVELOPMENT ORDINANCE HAVE BEEN APPROVED BY THE UPPER PROVIDENCE TOWNSHIP BOARD OF SUPERVISORS:
    1. SECTION 154-19.A.2
    2. SECTION 154-22.A
    3. SECTION 154-23
    4. SECTION 154-26-B-1
    5. SECTION 154-18.D(4)
    6. SECTION 154-19-A.3
    7. SECTION 154-21.A(1)
18. MONTGOMERY COUNTY PLANNING COMMISSION NUMBER IS 02-01.35-002.
19. CONDITIONAL USE APPLICATION NUMBER IS 02-048016-821 CU, APPROVED ON JANUARY 6, 2003 AND REVISED ON MARCH 7, 2003.
20. THE ULTIMATE RIGHT-OF-WAY FOR EXISTING ROADS SHOWN ON THE PLAN ARE HEREBY OFFERED FOR DEDICATION TO THE APPLICABLE GOVERNMENTAL AGENCIES.
21. EXISTING CALCULATED FLOODWAY LOCATED ALONG SOUTHERN PROPERTY LINE OBTAINED FROM PLANS ENTITLED "PROVIDENCE BUSINESS PARK AT OAKS PHASE 2", SHEETS 2 THROUGH 6 OF 21, DATED DECEMBER 14, 2001, LAST REVISED FEBRUARY 21, 2001 AS PREPARED BY BURKISH ASSOCIATES, INC.
22. UTILITY COMPANIES ARE GRANTED AN EASEMENT OVER, UNDER AND ACROSS A TEN (10') WIDE PORTION OF THE FRONT YARDS. THE EASEMENT AREA SHALL BE MEASURED FROM THE RIGHT-OF-WAY AND RUN THE ENTIRE LENGTH OF THE LOT. THE EASEMENT IS GRANTED FOR THE PURPOSE OF PLACEMENT AND MAINTENANCE OF ELECTRIC TRANSFORMERS AND TELEPHONE AND CABLE TERMINAL BOXES, WHICH WILL BE ENGINEERED FOR SPECIFIC LOCATIONS ON LOTS PER THE UTILITY COMPANIES DESIGN CRITERIA AND WILL NOT BE RELOCATED.
23. THE PROPOSED +/-10,000 S.F. COMMUNITY CENTER WHICH INCLUDES A FITNESS CENTER, MEETING ROOM, BILLIARDS ROOM, INDOOR AND OUTDOOR POOL, IS FOR THE EXCLUSIVE USE OF RESIDENTS OF THIS COMMUNITY AND THEIR GUESTS ONLY.
24. THE MINIMUM LOT AREA IS 4,900 S.F., THE MAXIMUM AREA IS 14,437 S.F. AND THE AVERAGE LOT AREA IS 7,142 S.F.
25. FOR OWNERSHIP AND MAINTENANCE PURPOSES A 20' WIDE SANITARY SEWER EASEMENT IS DEDICATED TO THE UPPER PROVIDENCE TOWNSHIP SEWER AUTHORITY FOR ALL SANITARY SEWER LOCATED WITHIN THE OUTBOUND OF THE PROJECT.

EASEMENT CURVE TABLE

CURVE	RADIUS	LENGTH	TANGENT	CHORD	CHORD BEARING	DELTA
EC1	125.00'	27.03'	13.57'	26.98'	S22°40'27"W	12°23'20"
EC2	25.00'	17.53'	9.14'	17.17'	N86°43'59"E	40°09'25"
EC3	175.00'	25.09'	12.56'	25.06'	N84°26'18"E	8°12'45"
EC4	475.00'	19.79'	9.90'	19.79'	N02°34'48"E	2°23'14"
EC5	475.00'	5.22'	2.61'	5.22'	N04°05'18"E	0°37'45"
EC6	175.00'	33.73'	16.92'	33.67'	S22°38'47"W	11°02'31"
EC7	175.00'	26.72'	13.39'	26.69'	S12°45'59"W	8°44'54"
EC8	225.00'	25.03'	12.53'	25.01'	S50°55'17"E	6°22'22"
EC9	175.00'	12.51'	6.26'	12.51'	N37°05'31"E	4°05'46"
EC10	175.00'	12.51'	6.26'	12.51'	N33°00'05"E	4°05'46"
EC11	185.00'	20.63'	10.33'	20.62'	N23°04'00"E	6°23'23"
EC12	105.00'	43.47'	23.10'	43.17'	N79°03'23"E	24°48'42"
EC13	185.00'	2.62'	1.31'	2.62'	N19°27'56"E	00°48'46"
EC14	185.00'	2.54'	1.27'	2.54'	N26°39'19"E	00°47'15"

OWNER OF RECORD:

TOLL PA II, L.P.
250 GIBRALTAR ROAD
HORSHAM, PA. 19044
(215) 914-2050

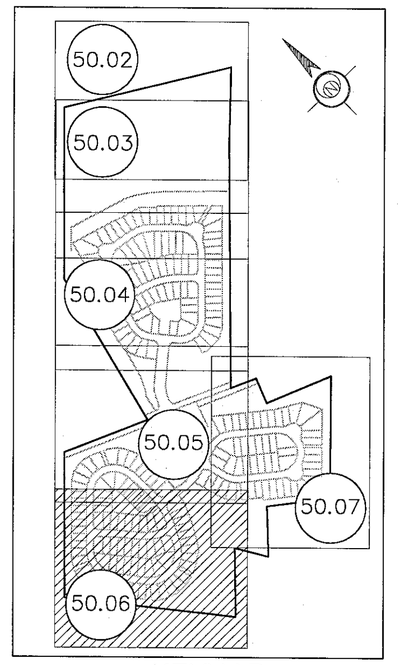

KEYMAP

SITE DENSITY CALCULATIONS

SITE DATA:

TOTAL SITE AREA: 104.53 ACRES
EXISTING EGYPT ROAD R.O.W.: 0.75 ACRES
STEEP SLOPE AREAS: 10.6 ACRES
FLOODPLAIN (ALLUVIAL SOILS OUTSIDE STEEP SLOPES): 9.68 ACRES

DEVELOPABLE AREA: 83.5 ACRES

DENSITY:

ALLOWABLE: MAX 2.5 DU/DEVELOPABLE ACRE = 208 LOTS
ALTERNATE ALLOWABLE: MAX 2.75 DU/DEVELOPABLE ACRE = 229 LOTS
PROPOSED: 2.72 DU/DEVELOPABLE ACRE = 227 LOTS
(WITH OPEN SPACE BONUS)

PARKING (COMMUNITY CENTER):

MAXIMUM LAWFUL OCCUPANCY: 100 PERSONS
REQUIRED PARKING: 0.75 STALLS PER 1 PERSON LEGAL OCCUPANCY
PROPOSED: 84 STALLS
56 PAVED STALLS (INCLUDING 2 HANDICAP STALLS)
28 STALLS IN UNPAVED RESERVE PARKING AREA

CURVE TABLE

CURVE	RADIUS	LENGTH	TANGENT	CHORD	CHORD BEARING	DELTA
C101	525.00'	112.07'	56.26'	111.86'	N12°47'38"E	12°13'53"
C102	225.00'	448.75'	348.29'	377.99'	N76°02'47"E	114°16'26"
C103	225.00'	328.16'	201.05'	299.84'	S05°02'20"E	83°33'56"
C111	25.00'	39.27'	25.00'	35.36'	S81°44'56"W	90°00'00"
C112	500.00'	50.98'	25.51'	50.95'	N50°19'48"W	5°50'31"
C113	325.00'	134.33'	68.14'	133.37'	S59°14'56"E	23°40'53"
C114	25.00'	39.27'	25.00'	35.36'	N26°05'28"W	90°00'00"
C115	175.00'	349.03'	270.89'	293.99'	N76°02'47"E	114°16'26"
C116	175.00'	255.24'	156.37'	233.21'	S05°02'20"E	83°33'56"
C117	25.00'	39.27'	25.00'	35.36'	S08°15'04"E	90°00'00"
C118	500.00'	50.98'	25.50'	50.95'	N50°19'48"W	5°50'31"
C119	275.00'	113.66'	57.65'	112.85'	S59°14'56"E	23°40'53"
C120	25.00'	39.28'	25.01'	35.36'	N83°33'41"E	90°01'46"
C121	475.00'	245.37'	125.49'	242.65'	N04°04'53"E	29°35'49"
C153	225.00'	27.59'	13.71'	27.57'	N22°23'48"E	6°58'26"
C154	225.00'	45.90'	23.03'	45.82'	N31°43'42"E	11°41'21"
C155	225.00'	45.90'	23.03'	45.82'	N43°25'01"E	11°41'18"
C156	225.00'	44.28'	22.21'	44.21'	N54°33'55"E	11°16'31"
C157	225.00'	25.03'	12.53'	25.01'	N63°43'22"E	6°22'22"
C158	225.00'	45.46'	22.82'	45.41'	N72°42'05"E	11°35'04"
C159	225.00'	45.89'	23.03'	45.81'	N84°20'12"E	11°41'11"
C160	225.00'	45.90'	23.03'	45.82'	S83°58'33"E	11°41'18"
C161	225.00'	45.90'	23.03'	45.82'	S72°17'14"E	11°41'19"
C162	225.00'	46.31'	23.24'	46.23'	S60°32'47"E	11°47'39"
C163	225.00'	27.15'	13.59'	27.14'	S51°11'32"E	6°54'52"
C164	225.00'	23.03'	11.52'	23.02'	S43°53'04"E	5°51'52"
C165	225.00'	49.87'	25.04'	49.76'	S34°36'12"E	12°41'53"
C166	225.00'	49.07'	24.63'	48.97'	S22°00'22"E	12°29'45"
C167	225.00'	45.80'	22.98'	45.73'	S09°55'35"E	11°39'50"
C168	225.00'	49.43'	24.81'	49.33'	S02°31'57"W	12°35'14"
C169	225.00'	25.02'	12.52'	25.00'	S11°40'41"W	6°22'14"
C170	225.00'	45.03'	22.59'	44.95'	S20°35'49"W	11°28'02"
C171	225.00'	40.91'	20.51'	40.86'	S31°32'23"W	10°25'06"
C185	500.00'	20.82'	10.41'	20.82'	N52°03'29"W	2°23'10"
C186	500.00'	30.16'	15.08'	30.15'	N49°08'13"W	3°27'21"
C187	325.00'	45.37'	22.72'	45.33'	S59°24'50"E	7°59'50"
C188	325.00'	47.10'	23.59'	47.05'	S59°33'35"E	8°18'13"
C189	325.00'	41.86'	20.95'	41.83'	S67°24'03"E	7°22'45"
C190	275.00'	63.04'	31.66'	62.91'	S64°31'22"E	13°08'08"
C191	275.00'	50.62'	25.38'	50.55'	S52°40'55"E	10°32'45"
C192	550.00'	38.14'	19.08'	38.13'	N49°23'44"W	3°58'22"
C193	550.00'	17.94'	8.97'	17.94'	N52°18'59"W	1°52'09"
C200	475.00'	26.51'	13.26'	26.51'	N02°10'27"E	3°11'52"
C201	475.00'	125.25'	62.98'	124.88'	N11°19'35"E	15°06'25"
C213	500.00'	258.54'	132.23'	255.67'	N04°05'47"E	29°37'35"
C214	200.00'	398.89'	303.59'	335.99'	N76°02'47"E	114°16'26"
C215	200.00'	231.70'	178.71'	218.52'	S05°02'02"E	83°33'56"
C217	525.00'	53.53'	26.77'	53.50'	N50°19'48"W	5°50'31"
C218	300.00'	124.00'	62.90'	123.11'	S59°14'56"E	23°40'53"
C220	175.00'	49.30'	24.81'	49.13'	N26°58'46"E	16°08'24"
C221	175.00'	144.94'	76.92'	140.83'	N58°46'36"E	47°27'16"
C222	175.00'	97.22'	49.90'	95.88'	S81°34'50"E	31°49'51"
C223	175.00'	57.57'	29.05'	57.31'	S36°12'27"E	18°50'55"
C224	175.00'	50.71'	25.53'	50.53'	S38°30'55"E	16°36'10"
C225	175.00'	178.37'	97.80'	170.74'	S01°00'56"E	58°23'48"
C226	175.00'	26.16'	13.11'	26.14'	S32°27'57"W	8°33'58"
C291	525.00'	48.16'	24.10'	48.14'	N14°39'28"E	5°15'21"
C292	525.00'	14.88'	7.44'	14.89'	N18°05'50"E	1°37'29"
C253	525.00'	3.61'	1.80'	3.61'	S47°14'43"E	0°23'37"
C261	475.00'	0.24'	0.12'	0.24'	S18°52'41"W	0°01'47"

ZONING REQUIREMENTS:

TOTAL TRACT AREA = 104.529 ACRES
TAX MAP PARCEL NOS.: BLOCK 48, LOTS 16 & 18 AND BLOCK 64, LOT 6
ZONING DISTRICT : = ARR AGE-RESTRICTED RESIDENTIAL COMMUNITY DISTRICT
PROPOSED USE : SINGLE-FAMILY DWELLINGS WITH AGE-RESTRICTED RESIDENTIAL (ARR) COMMUNITY OVERLAY
TOTAL NUMBER OF PROPOSED LOTS = 227 (229 ALLOWED)

	REQUIRED	PROVIDED
MINIMUM LOT AREA (S.F.)	N/A	>4,900 (MIN.)
MINIMUM LOT WIDTH (FT.) AT BUILDING SETBACK LINE	N/A	>50
MAXIMUM BUILDING HEIGHT (FT.)	35	<35
MINIMUM FRONT YARD (FT.)	20	20
MINIMUM SIDE YARD (FT.)	N/A	5
MINIMUM REAR YARD (FT.)	N/A	15
MINIMUM DISTANCE BETWEEN BUILDINGS (FT.)		
SIDE	10	>10
REAR	30	>30
MAXIMUM GROSS DENSITY (DU/AC)	2.75	< 2.72
MINIMUM OPEN SPACE RATIO	30%	51.0% (53.168 AC.)
MAXIMUM IMPERVIOUS SURFACE RATIO(%)	25%	24.7%
MAXIMUM BUILDING COVERAGE(%)	15%	12.16%
MINIMUM NET SITE AREA (ACRES)	50	102.224 ACRES
MAXIMUM COMMUNITY CENTER HEIGHT	40(*1)	40

(*1) A MAXIMUM OF THREE (3) STORIES SHALL BE PERMITTED HEIGHT (FT.)

EASEMENT LINE TABLE

LINE	BEARING	LENGTH
L53	N47°34'27"W	10.74'
L85	S40°53'06"W	156.95'
L86	S53°13'52"W	38.85'
L87	N46°56'04"W	19.76'
L88	N53°13'52"E	39.04'
L89	S40°53'06"W	155.15'
L90	S82°14'31"W	40.61'
L91	S46°49'00"E	12.43'
L92	S07°45'29"E	15.35'
L93	S82°14'31"W	57.81'
L94	N54°57'02"W	63.71'
L95	N80°19'47"W	110.67'
L96	N46°49'00"W	157.69'
L97	N42°35'27"E	25.00'
L98	S46°49'00"E	150.42'
L99	N80°19'47"W	108.77'
L100	N54°57'02"W	69.34'
L101	N86°03'27"W	98.54'
L103	N86°03'27"W	89.31'
L120	N77°20'40"W	171.78'
L121	S36°44'56"W	660.25'
L129	S36°44'56"W	817.89'
L132	S77°20'40"E	132.78'
L136	S19°05'24"E	45.61'
L137	S70°54'36"W	25.01'
L138	N19°05'24"W	44.56'

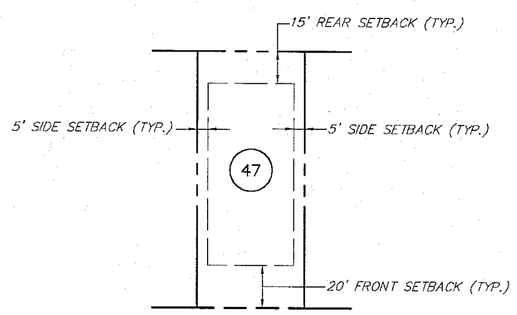

TYPICAL LOT REQUIRED SETBACKS
SCALE: 1=50'

AREA TABULATION – REGENCY AT PROVIDENCE:

TOTAL SITE AREA:	4,553,323 SQ. FT. OR	104.529 ACRES
PROPOSED 227 LOTS:	1,621,402 SQ. FT. OR	37.221 ACRES
FAIRMOUNT BOULEVARD ROW AREA:	38,211 SQ. FT. OR	0.877 ACRES
SLOAN ROAD ROW AREA:	134,038 SQ. FT. OR	3.077 ACRES
THAYER WAY ROW AREA:	28,574 SQ. FT. OR	0.656 ACRES
EDEN BOULEVARD ROW AREA:	31,492 SQ. FT. OR	0.723 ACRES
COPLEY ROAD ROW AREA:	22,932 SQ. FT. OR	0.526 ACRES
PETER'S WAY ROW AREA:	115,480 SQ. FT. OR	2.651 ACRES
LOGAN ROAD ROW AREA:	27,311 SQ. FT. OR	0.627 ACRES
HANOVER ROAD ROW AREA:	93,460 SQ. FT. OR	2.146 ACRES
EGYPT ROAD LEGAL ROW AREA:	32,660 SQ. FT. OR	0.750 ACRES
EGYPT ROAD DEDICATED ROW AREA:	46,971 SQ. FT. OR	1.078 ACRES
ANDERSON ROAD ROW AREA:	9,016 SQ. FT. OR	0.207 ACRES
DETENTION BASIN LOT AREA:	35,794 SQ. FT. OR	0.822 ACRES
OPEN SPACE LOT 228 AREA:	35,325 SQ. FT. OR	0.811 ACRES
OPEN SPACE LOT 229 AREA:	342,419 SQ. FT. OR	7.861 ACRES
OPEN SPACE LOT 230 AREA:	840,702 SQ. FT. OR	19.300 ACRES
OPEN SPACE LOT 231 AREA:	24,716 SQ. FT. OR	0.567 ACRES
OPEN SPACE LOT 232 AREA:	1,072,820 SQ. FT. OR	24.629 ACRES
TOTAL OPEN SPACE AREA:	2,315,982 SQ. FT. OR	53.168 ACRES

SITE DENSITY CALCULATIONS

SITE DATA:

TOTAL SITE AREA: 104.53 ACRES
EXISTING EGYPT ROAD R.O.W.: 0.75 ACRES
STEEP SLOPE AREAS: 10.6 ACRES
FLOODPLAIN (ALLUVIAL SOILS OUTSIDE STEEP SLOPES): 9.68 ACRES

DEVELOPABLE AREA: 83.5 ACRES

DENSITY:

ALLOWABLE: MAX 2.5 DU/DEVELOPABLE ACRE = 208 LOTS
ALTERNATE ALLOWABLE: MAX 2.75 DU/DEVELOPABLE ACRE = 229 LOTS
PROPOSED: 2.72 DU/DEVELOPABLE ACRE = 227 LOTS
(WITH OPEN SPACE BONUS)

PARKING (COMMUNITY CENTER):

MAXIMUM LAWFUL OCCUPANCY: 100 PERSONS
REQUIRED PARKING: 0.75 STALLS PER 1 PERSON LEGAL OCCUPANCY(75 PROPOSED)
PROPOSED: 84 STALLS
56 PAVED STALLS (INCLUDING 2 HANDICAP STALLS)
28 STALLS IN UNPAVED RESERVE PARKING AREA

LEGEND:

- MONUMENT TO BE SET
- MONUMENT FOUND
- IRON PIN/PIPE FOUND
- (5) PROPOSED LOT NUMBER
- NR NON-RADIAL LOT LINES
- PROPOSED CENTER LINE
- PROPOSED PROPERTY LINE
- BUILDING SETBACK LINE
- PROPOSED R.O.W.
- OUTBOUND LINE
- EASEMENT
- WETLANDS
- STEEP SLOPES (>15%)

GRAPHIC SCALE
50 0 25 50 100 200
(IN FEET)
1 inch = 50 ft.

ESE EASTERN STATES ENGINEERING
CIVIL ENGINEERS - LAND SURVEYORS - LANDSCAPE ARCHITECTS - LAND PLANNERS
250 GIBRALTAR ROAD SUITE 2
HORSHAM, PA 19044
TEL: (215) 914-2050
FAX: (215) 293-5488

CAUTION: THIS DOCUMENT DOES NOT CONTAIN A RAISED SEAL OF THE PROFESSIONAL ENGINEER. ANY COPIES MUST BE AUTHORIZED ORIGINAL DOCUMENT AND MAY HAVE BEEN ALTERED.

THOMAS B. HENDRICKS
PROFESSIONAL LAND SURVEYOR
PA LICENSE NO. SU-044532-E

REV.	DATE	DESCRIPTION	DRAWN
8	01/28/05	REVIEW LETTER DATED 01/28/05 & UPDATED TITLE BLOCK	KMS
7	01/12/05	REVIEW LETTER DATED 01/06/05	KMS
6	11/22/04	REVIEW LETTER 9/28/04, REVS. A, D, & COMM CTR	KMS
5	10/19/04	AGENCY REVIEW LETTER, DATED 10/08/04	KMS
4	10/01/04		KMS
3	8/24/04	9/24/04	KMS
2	7/21/04	DEP & COMMENTS	KMS
1	6/04/04		KMS

FINAL MAJOR SUBDIVISION PLAN (SHEET 6 OF 7)

REGENCY AT PROVIDENCE (A.K.A. FOGEL TRACT)

UPPER PROVIDENCE TWP., MONTGOMERY CO., PENNSYLVANIA

DATE: 12/08/03	SCALE: 1"=50'
DESIGN: JT	DRAWN: KMS
JOB NO.: 1114	FILE NAME: RP50.06
REF. NO.: RP50.06	
SHEET NO.: 7 OF 78	