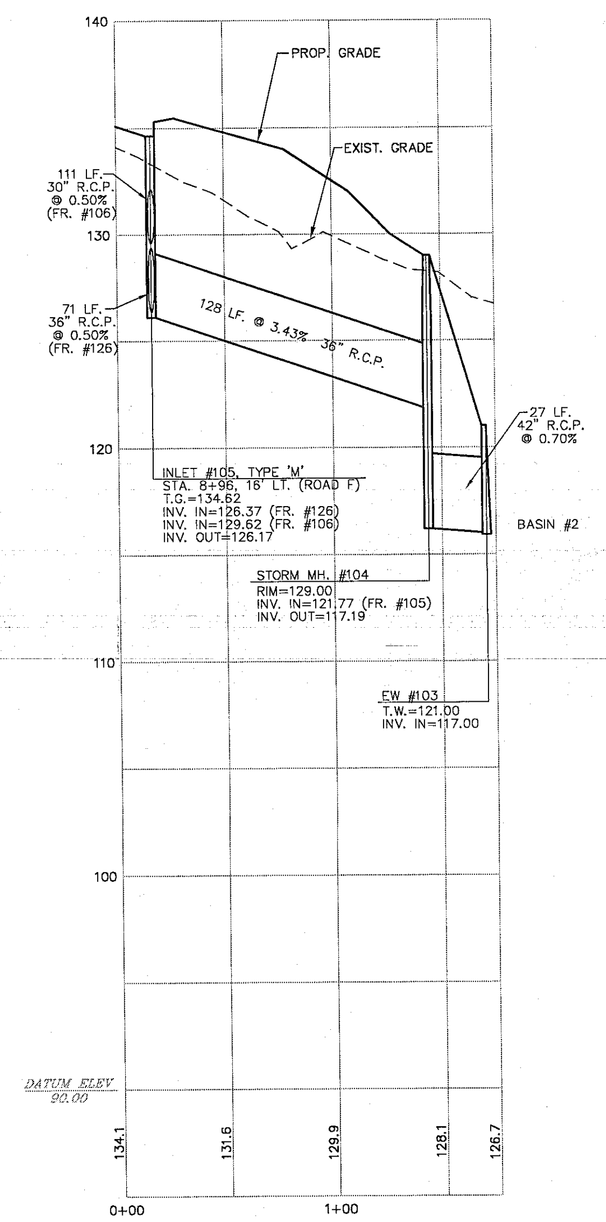

INLET 105 TO EW 103

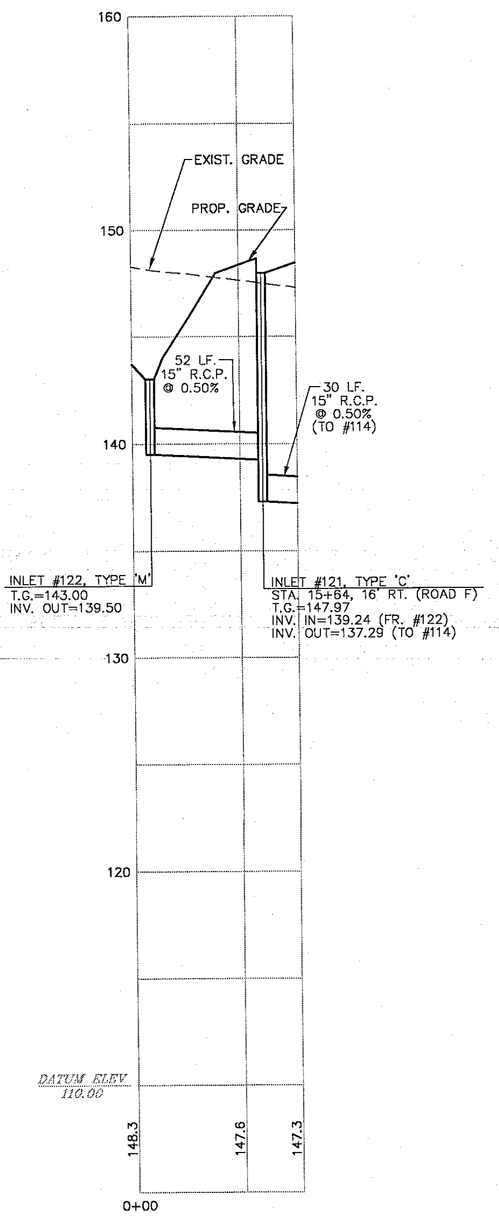

INLET 122 TO INLET 121

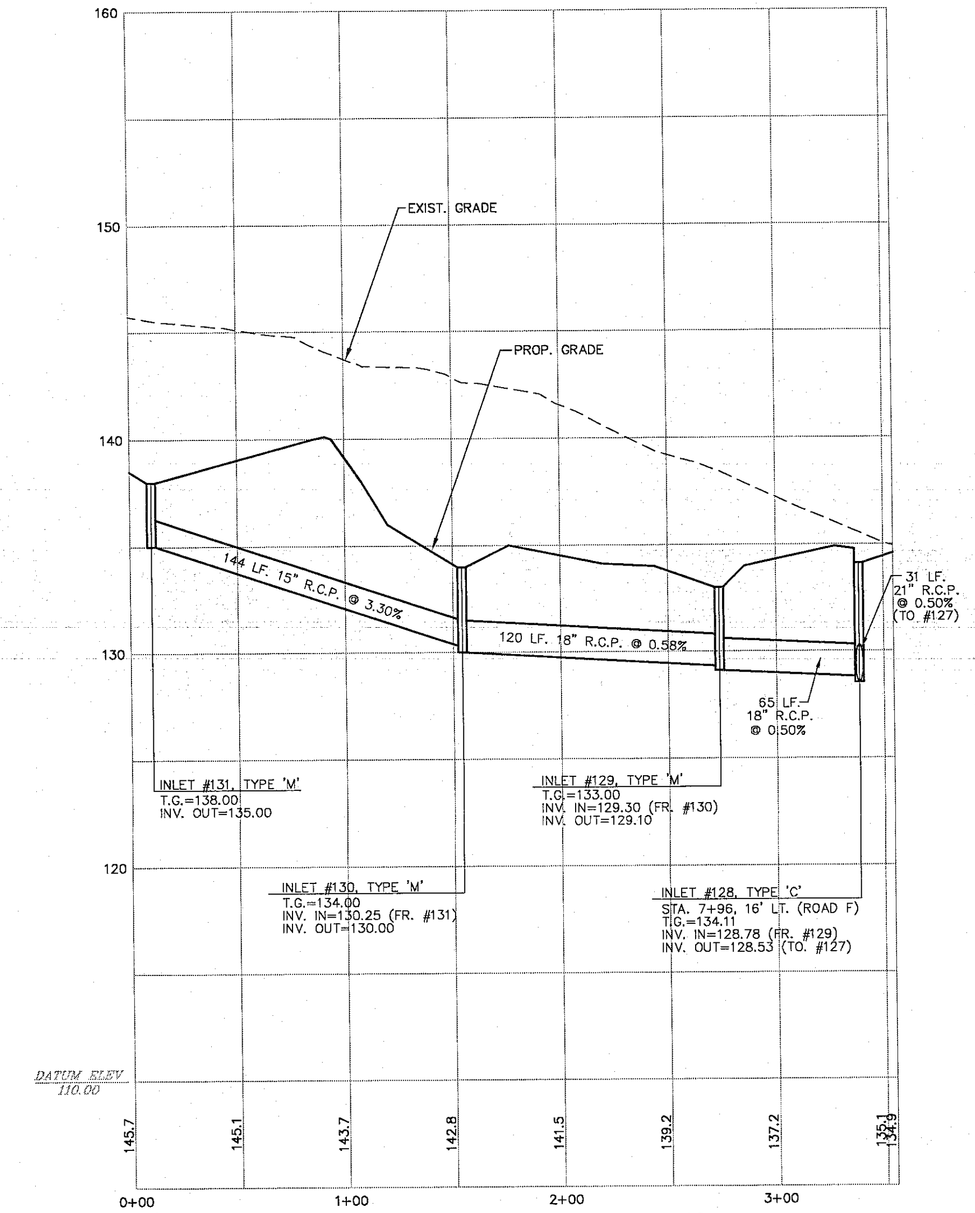

INLET 131 TO INLET 128

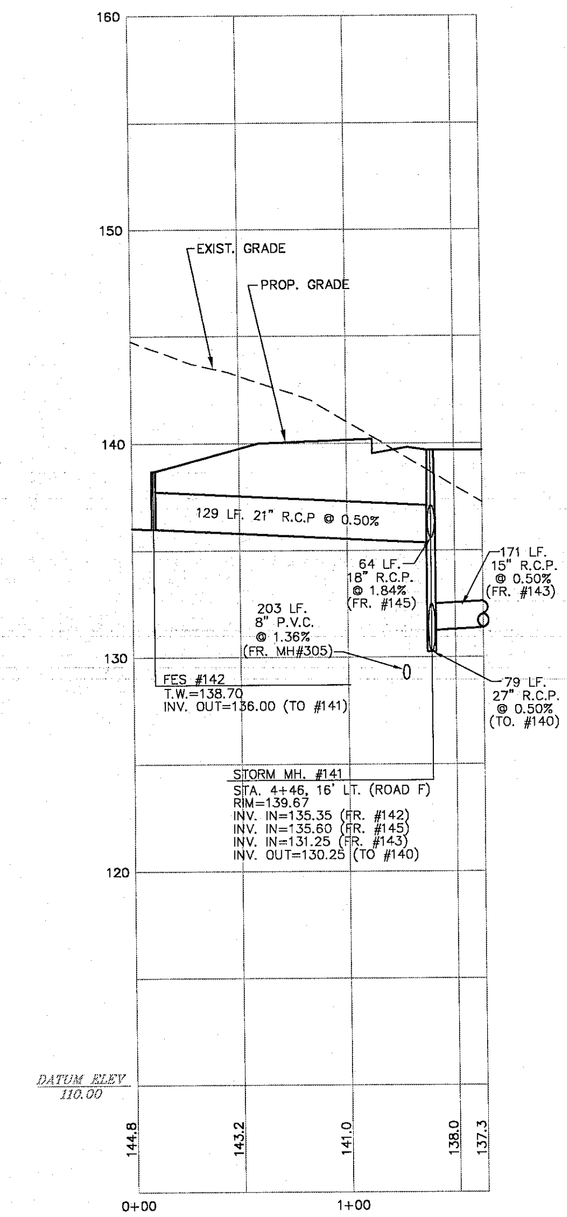

FES 142 TO MH 141

NOTE:

1. CONTRACTOR TO PROVIDE A MINIMUM OF 1.5' OF CLEARANCE WHERE WATERMAIN CROSSES PROPOSED SANITARY SEWER AND STORM SEWER COLLECTION SYSTEM.

2. CONTRACTOR TO PROVIDE A MINIMUM OF TWELVE (12) INCHES OF CLEARANCE BETWEEN STORM SEWER PIPE AND SANITARY SEWER SERVICE LATERALS. DEEP CUT LATERALS AND LATERAL RISERS TO BE USED WHERE NECESSARY.

SCALE: 1"= 50' HORIZ.
1"= 5' VERT.

COMMONWEALTH OF PENNSYLVANIA REGISTERED PROFESSIONAL ENGINEER
JAMES D. TAKACS
No. PE059040
James Takacs

250 GIBRALTAR ROAD
SUITE 2E
HORSHAM, PA 19044
TEL: (215) 914-2050
FAX: (215) 293-9488

ESE EASTERN STATES ENGINEERING
CIVIL ENGINEERS - LAND SURVEYORS - LANDSCAPE ARCHITECTS - LAND PLANNERS

REV.	DATE	DESCRIPTION	DRAWN
5	1/31/05	FINAL CONSTRUCTION DRAWINGS	MDD
4	11/22/04	REVIEW LETTER 9/28/04; RGS. A, B, D COMM CTR	MDD
3	8/04/04	AGENCY REVIEW LETTER DATED 7/29/04	MDD
2	7/21/04	AGENCY REVIEW LETTERS 6/29/04; GMP COMMENTS	MDD
1	6/07/04	AGENCY REVIEW LETTERS 4/30/2004	MDD

EASEMENT PROFILES

REGENCY AT PROVIDENCE
(a.k.a. FOGELSVILLE TRACT)
UPPER PROVIDENCE TWP., MONTGOMERY CO., PENNSYLVANIA

DATE: 12/8/03	SCALE: AS NOTED
DESIGN: JT	DRAWN: PAB
JOB NO.: 1114	FILE NAME: S-PROF-EASE
REF. NO.: SD07.20	
SHEET NO.: 39 OF 78	